The Big Picture

... on Biodiversity and Climate Change

An Environmental Education Program
for
Ontario Secondary Science Students

Author: Dianne Watkins, Conservation Halton

Editor: Alan Crook, Biodiversity Education and Awareness Network

BEAN Biodiversity Education and Awareness Network

Ontario

CONSERVATION HALTON

TABLE OF CONTENTS

LIST OF FIGURES

LIST OF TABLES

ACKNOWLEDGEMENTS

This program has been developed with contributions from the following individuals and groups:

- Ontario Biodiversity Education and Awareness Network Chair Alan Crook
- Crawford Lake and Mountsberg Program Development/Resource Interpreter Dianne Watkins
- Crawford Lake and Mountsberg Parks Manager Dolf Dejong
- Crawford Lake and Mountsberg Education Program Coordinator Brenna Bartley
- Crawford Lake and Mountsberg Program Instructors Jim Aikenhead, Tania Hutton, Adam McDowell and Terri Smith
- Conservation Halton Operations staff Rod Kennedy, Graham Lillycrop and Kathryn Wigood
- Conservation Halton Construction and Maintenance Projects Coordinator, Brian Coombs
- Crawford Lake and Mountsberg Resource Interpreters Lorraine Bannerman, Sasha Benevides, Sara Blanchett, Lara Butt, Rick Collins, Laura Crichton, Barbara Croall, Zack Curcija, Kirsten Dallimore, Sandra Davey, Al Denich, Kelly Doerr, Amy Fennell, Fred Johnson, Brian Rees, Dana Sykora, and Eric Trogdon
- Mountsberg Raptor Centre Volunteer Dave Radley
- Crawford Lake and Mountsberg Coop Student Tyler Adamson
- Halton District School Board liaison Ron Ballantine
- Toronto Catholic District School Board liaison Roberta Oswald
- Pilot program participants from St. Patrick's Secondary School in Toronto, Ontario, and Abbey Park High School, Oakville, Ontario
- St.-Laurent Academy Science Teacher, Michael Léveillé
- Free Range Studios liaison Juliet Unfried

Cover Images

Top row (left to right): Eastern Hemlock (*Tsuga canadensis*) *Photo: S. Detweiler*; Red Mulberry (*Morus rubra*), *Photo: Sally and Andy Wasowski*; South Point Wind Farm, *Photo: Harvey McDaniel*; Waterdown students in 1928, *Photo: York University Archives*.

Middle row (left to right): Trillium (*Trillium grandiflorum*), *Photo: Paul Johnston*; Long Point Marshes, *Photo: Wikimedia Commons*; St.-Laurent Academy student at Macoun Marsh, *Photo: Michael Léveillé, used with permission by Poonam Sood*; Eastern Bluebird (*Sialia sialis*), *Photo: Ken Thomas*.

Bottom row (left to right): Mountsberg solar panels, *Photo: Dianne Watkins*; 'Future Ecosystem Monitor', *Photo: Larry Halverson*; Tree Swallow (*Tachycineta bicolor*) *Photo: Ken Thomas*; Garlic Mustard (*Alliaria petiolata*), *Photo: Wikimedia Commons.*

ABSTRACT

Biodiversity is currently under threat from climate change conditions on planet Earth. In earlier times, ecosystems and their component species have had the flexibility to adapt their ranges to suit a changing climate. In the present, the adaptability of ecosystems is challenged by the speed of the change, habitat loss, and fragmentation all caused by human activities.

Individual actions can make a difference. The Biodiversity and Climate Change outdoor education program highlights choices available to individuals, and provides an opportunity for students to take action.

Program elements include:

- Exploring and sharing how students and others value, use and impact local ecosystems
- Examining connections between biodiversity, climate change, and human health and well-being
- Enjoying a local ecosystem in a low-impact manner
- Taking seasonally appropriate action to mitigate against these impacts
- Connecting international conventions to individual action, and individual action to international impact

Both pre- and post-program educator resource materials have been provided.

INTRODUCTION

Pre-Program Resources and Information

The Big Picture program has been developed for Grade 9 and 10 Academic and Applied Science students in Ontario (Appendix A: Curriculum Links). Pre-program materials (Appendix B: Pre-Program Educator Resources) may be optionally delivered to participants prior to participating in The Big Picture program.

Introductory Discussion: Biodiversity and Me

The interpreter may welcome students by giving them a brief outline of the day ahead. The program introduction consists of a short video, The BioDaVersity Code, with discussion before and after.

For students who have just begun investigating biodiversity and climate change, the video may be shown earlier in this session, so that it can help inform the discussion. For students who have already completed a certain amount of study, the interpreter will be able to conduct a more detailed introductory discussion followed by the video.

The interpreter may start the program by asking two questions: Can the students come up with any definitions of or synonyms for biodiversity? What do the students appreciate about biodiversity?

Take note of responses, which may be more or less detailed depending upon the group. Next, present the BioDaVersity Code video. After the video, ask the group for more ideas on the nature of biodiversity and how it might be appreciated. The interpreter may compare responses to the pre-video thoughts, and assess which new ideas have taken hold. The interpreter can then encourage students to recall any aspects that might have been missed, providing additional explanation if and as needed. In summary, the interpreter provides a formal definition of biodiversity, recaps the various things we do appreciate about biodiversity, and other benefits that we may not think of quite as readily.

The following text is adapted from A Biodiversity Outcomes Framework for Canada (Environment Canada, 2006).

Definition: Biological diversity, or *biodiversity**, is the variability among living organisms from all sources including, for example, terrestrial, marine and other aquatic *ecosystems* and the ecological complexes of which they are part; this includes diversity within species (*genetic diversity*), between species (*species diversity*) and of ecosystems (*ecosystem diversity*).

Appreciation: Biodiversity is an important component of Canada's wealth. Whether we think of it in terms of 'biodiversity' or not, we realize that fisheries, forestry, agriculture and tourism provide us with things we need, like food, shelter and livelihoods. We appreciate scenic landscapes, and outdoor recreation.

Additional benefits of healthy, biodiverse ecosystems:

- Clean air, clean water and fertile soil
- Oxygen production and carbon dioxide capture
- Climate regulation and control of floods and other natural hazards
- Protection from pest and disease outbreaks
- Prescription drugs and traditional medicines
- Food security
- Ecological and economic *resilience*

When these beneficial *ecosystem services* disappear, the connections between biodiversity and human health and well-being become obvious.

The BioDaVersity Code Video

Youtube Video Link

Description

The BioDaVersity Code, by Free Range Studios (n.d.), is a pastiche/parody of the Da Vinci Code movie, highlighting the human need to maintain the web of life (5.5 min). The link provided above right points to the video's YouTube page. Other options for accessing this video are also available (Appendix C: Introduction: Biodiversity and Me Resources).

Figure 1 **- BioDaVersity Code screenshot**

Please note that The BioDaVersity Code video is intended for educational purposes only and may not be shown for profit. If the film is being shown on a paid field trip as part of this program, please acknowledge Free Range Studios for having generously allowed such an exception to their general rule.

Transition

The interpreter may conclude the introductory session by reinforcing what the day is going to be about: *biodiversity* and *climate change*, impacts, *mitigation*, *adaptation* and *stewardship*. The intent is not to debate biodiversity loss, whether climate change is happening, or whether these are *anthropogenic* (human-caused) changes or not. Yes, climate change does occur in long term cycles. The difference this time is that we are collectively generating more greenhouse gas emissions, but have also removed much of the native biodiversity that could have helped protect us from climate change impacts. The day will be about reducing human impacts to biodiversity, and mitigating biodiversity loss to help protect against and adapt to climate change.

For additional climate change facts, refer to Appendix C: Introduction: Biodiversity and Me Resources.

The interpreter may conclude the transition by inviting students outside to explore some links between climate change, biodiversity, and human health and well-being in an exercise called Tipping Point.

Introductory Learning Activity: Tipping Point

Overview

Tipping Point is based on a team-building activity, modified to convey the interconnectedness of biodiversity, climate change, and human impacts, mitigation, and adaptation.

Description

Participants represent components of an ecosystem and will be challenged to keep that system in equilibrium, throughout a series of positive and negative influences on the system's resilience.

Key Message

Mitigation and adaptation activities are critically important to genetic, species and ecosystem biodiversity, of which human beings are part, and on which we depend for health and well-being.

Setting

A very large outdoor level surface, or indoor space such as a gymnasium.

Materials

Poles for each participant, such as a straight, trimmed branch or similar, reaching approximately waist to chest height when balanced vertically on the ground.

Preparation

None

Run time

15 minutes

Introduction

Participants stand in a circle, fairly close together but not crowded to the point of touching. Each person balances a straight pole (branch or similar) vertically on the ground in front of him or herself. Participants represent components of an ecosystem and are challenged to keep that system in balance during a series of position shifts. If components are dropped, biodiversity has been lost, valuable ecosystem services are lost, with impacts to human health and well being.

Practise Round

The interpreter counts down 3-2-1- and then calls out a direction shift, left or right. Each person must leave their branch balanced and run to the next point on the circle, in the correct direction, to catch the next branch before it falls. This round may require several practise shifts to ensure a stable, functioning ecosystem where no branches fall to the ground when a shift occurs.

First Round (impacts, mitigation and adaptation)

The interpreter leads a round in two or more steps, alternating 'impact' statements with 'mitigation/adaptation' statements (Appendix D: Tipping Point Resources), and calling position shifts in between. With each impact statement, either a gap in the circle is created, or everyone takes a step back making the whole circle larger and increasing the distance between each ecosystem component. With mitigation/adaptation statements, gaps are filled and/or students step in making the circle smaller once more.

Second Round (impacts only)

The interpreter now asks the group to consider what would happen if people were not taking action to fight biodiversity loss and climate change. Interpreter leads two or more 'impacts only' shifts until the distance between branches is too far to maintain the ecosystem's equilibrium. The ecosystem reaches its Tipping Point, and we see that human action is critical to fighting climate change and biodiversity loss.

Third Round (optional. impacts, mitigation and adaptation)

The interpreter leads a round consisting of net positive actions which brings all participants back into the circle, moving closer and closer together until the ecosystem is restored to balance, has regained its resilience, so that no sticks are dropped. This final round may be omitted if time is running short.

Transition

Mitigation and adaptation activities are critically important to genetic, species and ecosystem biodiversity, of which human beings are part, and on which we depend for health and well-being.

Now that participants are warmed up a bit, the interpreter can invite them to participate in the next activity: The Big Picture.

LEARNING ACTIVITY: BIG PICTURE

Overview

Description

Big Picture is an 'EnviroThon' style collaborative exercise. This activity is intended to exemplify an engaging yet low-impact recreational/educational use of a natural area. In Big Picture, small teams race to complete a set of challenges in the pursuit of a common goal. The final goal is the completion of a collage of images linking climate change and biodiversity concepts. The collage is based on each teams's interpretations of the various challenges.

The following outline is developed for four teams, and four challenge themes (including one two-part challenge), resulting in a 4x5 image. This format can be expanded or contracted per individual program leaders' needs.

Setting

A well-defined outdoor course loop, where colour-coded stations are placed frequently enough to act as trail blazes. For locations that do not have a loop trail available, the activity may be set up in an open area so that the interpreter remains at a central 'home base' and challenges are set out at various distances, like spokes on a wheel. For longer trails, a trail map and/or additional trail markers may be required.

Key Message

Climate change has the potential for a variety of impacts. Mitigation and adaptation activities are a collective responsibility.

Materials

20 weather-proof 'challenge' containers (5 each of four different colours)

4 Tree ID Keys, 1 per group (Appendix E: Big Picture Resources)

4 Trail maps, 1 per group, and/or any additional trail markers needed

1 Sheet Bristol board, standard size

40 Mailing labels printed with two copies of each challenge

Ruler, scissors, pencils, pencil crayons, and pencil sharpeners

Optional:

A completed "Big Picture" sample

Team ID markers, such as armbands, bandannas, etc.

A whistle

Preparation

- Plan race course and station placement. A 1.5km course will take a group roughly 30 to 45 minutes.
- Determine challenge questions for local site (Appendix E: Big Picture Resources).
- Prepare and load challenge stations.
- If there are forks in the trail between stations, either provide a route map to participants, and/or set up trail marker to ensure the correct route is taken.
- Prepare numbered, labelled 'Big Picture' sheets.
- Position the station boxes around the course (30 min setup for 1.5km loop).
- Prepare an art space with pencil crayons, Bristol board, scissors, tape and sharpeners.

Run Time

60 minutes (45 minutes if art component must be sent back to school)

Introduction

In Big Picture, participants work in four teams to examine biodiversity and climate change, in the context of an Envirothon-style race. To begin the interpreter divides the group into four colour coded teams.

First round: The Race

Ground Rules

- Teams are asked to define 'sportsmanlike behaviour' for the activity (ie not interfering with other teams' challenge stations).
- When the program interpreter starts the race, each team circles the course, stopping only at stations that match their team colour.
- Teams and interpreter round the course together. The interpreter is the 'pace-setter'. The teams must be aware that as a whole the group must stay together, and stragglers need to keep up!!
- Teams will read and complete challenges one by one, returning to the interpreter to 'pass' each stage before moving on to the next one.
- Teams must not accumulate all the challenges and then come to the interpreter with everything at once!
- The last place team must keep moving with the interpreter and try to complete each challenge before the next station is reached.
- Challenges are the same for each team, but teams may not copy other groups' answers, and must come up with their own ideas for solutions.
- The winning group is the first to have all its challenges complete and all its members across the finish line. Emphasize that the exercise is not over until all groups have completed all challenges.
- This game is *low impact*; that is, teams *must* stay on the trail, and will be subject to penalty if they don't. You can't protect biodiversity by trampling all over it.

Once the ground rules are set, the interpreter can indicate the direction of the first challenge and the rest of the course (if not obvious) and start the race. A whistle can be handy for calling back any errant racers. At the end of the activity, acknowledge the winning team, and lead students inside for cool-down and the final round of Big Picture.

Second round: The Big Picture

- This part of the activity will have more or less time available, depending on the school's schedule and the size of the course. If time is short, an introduction will suffice.
- The 'Big Picture' starts as a sheet of Bristol board divided into a grid with a row for each team and a column for each challenge. Mailing labels with each challenge for each team are affixed to the back of the sheet.
- The class is invited to collaborate as a team on their section of the 'Big Picture'. Having a demonstration sheet on hand to provide some ideas may be useful.
- The groups can cut the sheet into sections to work on representing their respective team's findings from the race, to be reattached as a mural and taken back to school.

Transition

When students have completed the Introduction, Tipping Point, and Big Picture, the interpreter may state the conclusion that human action is required to mitigate biodiversity loss and adapt to climate

change impacts. The students are invited to rest for lunch and to regroup in 30 minutes for their opportunity to take that action, during the Stewardship Session.

STEWARDSHIP SESSIONS

The stewardship activities detailed in this section are selected for implementation at Mountsberg and Crawford Lake Conservation Areas. Other outdoor education centres may wish to consult with local site managers to determine semi-regular stewardship activities that are both seasonally appropriate and feasible for their respective locations. Secondary teachers who choose to implement the Big Picture program may opt to partner with site managers for a local natural and/or protected area. Activities that may be considered include planting (consider native species that attract pollinators, or provide winter food for wildlife), winter feeding, bat box building, microhabitat creation, and more. The Hinterland Who's Who web site provides a wide variety of stewardship activity options.

Nesting Boxes

Overview

Description

Nest box construction is an excellent activity for fall or wintertime stewardship. This activity can also be implemented at need, in the event of severely inclement spring weather. The following example focuses on Tree Swallows and Eastern Bluebirds, but nesting boxes may be designed for a wide variety of cavity-nesting birds (Appendix F: Stewardship/Nesting Box Resources).

Setting

An indoor or outdoor space set up for students to work in groups to assemble kits into nesting boxes.

Key Message

Humans have a responsibility to provide alternate habitat when human activities modify or degrade a species` preferred habitat.

Materials

Nest box kits for four or more groups (Appendix F: Stewardship/Nesting Box Resources).

Completed nest box kit to serve as an example

Robertson/square head #2 screwdriver, one screwdriver per group

Coated 2" flat head screws (16 per nest box)

Safety glasses, one pair per group

Optional:

Laminated species documents, including images and climate change impacts, for optional reading (Appendix F: Stewardship/Nesting Box Resources).

Preparation

Set up working areas for four groups. Prepare but do not set out prefabricated nesting box kits, screwdrivers, screws, and safety glasses for each station.

Run Time

90 minutes

Build a Nesting Box

To introduce the nesting box session, the interpreter may give a brief description of how climate change and biodiversity loss has been affecting bird species in Canada (Appendix F: Stewardship/Nesting Box Resources). The following information, excerpted/adapted from Hinterland Who`s Who (n.d. a) and Nielsen (n.d.) may be useful:

In Canada, about 50 species of birds, ranging in size from wrens to ducks, nest in cavities. Normally, woodpeckers and chickadees excavate these cavities in decayed trees or stumps. These birds make new holes each year, leaving the old ones for other cavity-nesting birds. Often, these cavities are *limiting factors* in determining the *carrying capacity* of a habitat for each cavity-nesting species. Natural nest sites disappear as weakened or dying trees are removed from our forests for economic and safety reasons, further decreasing the carrying capacity. As a result, there is intense competition for nest holes, with declines occurring in local populations of cavity-nesting species in recent years. When a species is confronted with environmental change, it has three options: adapt, move or die. By providing nest boxes in appropriate areas, we can help species to adapt, and help reverse population decline.

Next the interpreter may introduce the project, including showing the students the sample completed nest box and describing the various features including ventilation, drainage, and reasons for the hinged door (access for cleaning) and lack of perch (deterring nest predators). Note that rough cut lumber, as opposed to finished boards, allow nestlings to grip the wood when they get old enough to climb up to the entrance hole. The type of box chosen, and the desirable and non-native species that may compete for it, can be detailed here.

Once the explanation and any questions are completed, set out the kits, tools, and safety glasses for each group. Circulate to answer questions and assist as needed. Invite students to take one nesting box back to school. Let them know that the remaining nesting boxes will be used in the local program. If there is time, show them the locations where student nesting boxes have been mounted, and where the current classes will be installed.

Case example: Mountsberg Conservation Area

The following text is adapted from Hinterland Who's Who –Create Shelter for Songbirds (HWW n.d. a).

At Mountsberg Conservation Area, the nesting box program provides habitat for Tree Swallows and Eastern Bluebirds. The Eastern bluebird was once in trouble in Ontario. This bird is at the northern tip of its natural range in Ontario. Habitat loss and competition from invasive species like starlings and sparrows were causing the small Ontario population to decline. Nesting box programs allowed the Eastern Bluebird to recover. These programs must be maintained, so that the species continue to thrive.

Due to warmer winters in Ontario, Eastern Bluebirds are arriving in Ontario earlier in the season. Ontario residents may also need to consider conserving important forest habitat further north, not only for the bluebirds' sake, but for the wide array of other benefits that healthy biodiverse forest ecosystems provide – like carbon storage.

Invasive Species Removal

Overview

Description

Invasive species removal can be suitable for either spring or fall stewardship sessions, however, the selection of species can be strongly dependent on season. This program example guides students through learning about the invasive alien species Garlic Mustard, and participating in a removal project, according to strict protocol. Under that protocol, Garlic Mustard removal must be done in springtime. Other invasive alien species are less sensitive to seasonality and may be selected for fall stewardship sessions. Confirm with site managers that a commitment can be made to springtime garlic mustard removal for 5-7 years; as long as it takes to ensure that the seed bank has been exhausted.

Setting

An outdoor space where selected invasive alien species may be observed.

Key Message

Human action and awareness is required to prevent the spread of invasive alien species.

Materials

Invasive species identification sheets, and look-alike guides for each group; black plastic garbags bags; work gloves

Preparation

Select priority locations for removal. Have information sheets ready for each group (Appendix G: Stewardship/Invasive Alien Species Resources).

Run Time

90 minutes

Participate in Invasive Species Removal

The interpreter may provide introductory information to start the session, as follows. The following text has been excerpted from Garlic Mustard Removal (BEAN, 2009a).

Garlic Mustard is a kitchen herb from Europe that invades forest understories in Ontario. It can outcompete and overtake herbs, flowers and tree seedlings, eventually creating patches of pure Garlic Mustard, and threatening the productivity and long-term survival of the trees themselves.

While it is important to control the spread of this highly invasive species, it needs to be done according to a strict protocol. Homeowners may pull Garlic Mustard in their own backyard without necessarily causing negative impacts. In natural areas however, there are a number of reasons why a stricter protocol is needed:

- Certain native species look like Garlic Mustard, particularly in the spring, and in early stages of growth. It is too easy to pull or cut the wrong plant.
- New plants can grow from disturbed soil. Without a commitment to return and remove new plants each year, growth of Garlic Mustard can actually be encouraged.
- Seeds are very tiny, and easily transported on clothing, in mud clinging to boots, or on pet fur. Without careful cleanup, the range of Garlic Mustard can actually be increased.

- If there are any endangered species in the area you may be required under law to obtain a permit. Please consult with the proper provincial and federal authorities on the Species at Risk permitting requirements.

The interpreter may guide students through identification of garlic mustard and known look-alikes, introduce before-and-after shoe checks, and removal/disposal protocol (Appendix G: Stewardship/Invasive Species Removal Resources).

A previous year's stem and pods can be a useful aid to describing garlic mustard's invasive potential. Have students estimate 10 seeds per pod and count pods by tens, to estimate seeds produced on a single plant.

PlantWatch

Description

PlantWatch is part of Canada's NatureWatch series of volunteer monitoring programs. NatureWatch programs are designed to help identify ecological changes that may be affecting our environment. The following module has been developed as an option for springtime stewardship activities.

Setting

An outdoor space where selected PlantWatch species may be observed.

Key Message

Individuals observing local ecosystems can help us understand climate change effects at a provincial and national level.

Materials

Laminated PlantWatch Field ID Sheets, and Field Observation Sheets, 1 set for each group

Prep

Stake out locations for observation, along a 1.5km route. Have Locator and ID keys ready for groups to use.

Run Time

90 minutes (required time is highly flexible depending on site and route selection)

Participate in PlantWatch

To begin the PlantWatch Stewardship Session, the interpreter may choose to provide a brief overview of the Nature Canada/Environment Canada PlantWatch initiative.

The following information has been excerpted from the PlantWatch web site (Environment Canada, n.d. a). PlantWatch is part of Canada's NatureWatch series of volunteer monitoring programs. NatureWatch programs are designed to help identify ecological changes that may be affecting our environment. PlantWatch "citizen scientists" record flowering times for selected plant species. These species bloom every spring, largely in response to rising temperatures. Participants learn about local botanical diversity, while helping researchers discover how common plants are responding to climate change, and track the effects of global warming and climate change in Canada. Observers then report the flowering dates online. Data submitted electronically instantly updates the online map to show new input. Scientists have learned that some of these species are flowering almost a month earlier than they were a century ago.

After introducing PlantWatch, the interpreter will lead students to one or more sites, predetermined by the interpreter in consultation with site managers. Ideally, several species with earlier and later bloom rates will allow the PlantWatch component to be available over as many weeks as possible. Participants may be provided with laminated locator keys. When students reach a given site, if the species is not immediately recognizable, they may use the keys to determine which species they believe they have found. If no flowers are present, the interpreter may provide known floral information for the plant to get students started on identification. To ensure student understanding of the key, have students provide not only the name of the plant, but its number code (Appendix H: Stewardship/PlantWatch Resources).

The interpreter may then distribute field data sheets (Appendix H: Stewardship/PlantWatch Resources) and have groups complete their observations. The interpreter may choose to record his or her own field data and maintain online PlantWatch records for the site. Students and teachers may be encouraged to create a PlantWatch user account for their class, and submit schoolyard findings to the PlantWatch online data management system at appropriate points in the season. Additional guidance may be provided to educators, as a post program resource (Appendix K: Post Program Resources).

Transition

Thank students for participating in the Stewardship Session and taking action to combat biodiversity loss and mitigate climate change impacts.

CLOSING

The interpreter may thank the students for coming to the area and participating in the Big Picture Biodiversity and Climate Change Program. Interpreters may present a Certificate of Participation in recognition of the group's stewardship efforts (Appendix J: Closing Resources).

The interpreter may wish to ask the group whether they feel differently about taking individual action now that they have been through the program. The interpreter may inquire whether any of the students is now making plans to reduce their personal greenhouse gas emissions, or whether they might become involved in biodiversity restoration activities in their own communities.

Interpreter may advise group that they can also celebrate biodiversity through International Biodiversity Day, May 22nd of each year. The theme for 2010 is Biodiversity and Development, and the 2011 theme will be Biodiversity and Forests. If students wish to participate in a local event, they can find them posted close to the date on the BEAN website, www.biodiversityeducation.ca. The interpreter may invite students to continue to participate in 2010 celebrations of the International Year of Biological Diversity.

The interpreter may thank the students once more for their participation in the Big Picture on Biodiversity and Climate Change program.

While students are preparing to depart, the interpreter may provide the group's teacher with a list of resource links for student participation and networking opportunities (Appendix K: Post Program Resources). Feedback forms and any other handouts may also be presented to the group's teacher at this time.

REFERENCES

Audubon Society (2009). *Birds and Climate Change: Ecological Disruption in Motion*. Retrieved from http://www.audubon.org/news/pressroom/bacc/pdfs/Birds%20and%20Climate%20Report.pdf

BEAN. (2009a). *Garlic Mustard Removal*. Retrieved from http://www.biodiversityeducation.ca/index.php/garlic_mustard

BEAN. (2009b). *Biodiversity Concepts*. Retrieved from http://www.biodiversityeducation.ca/bean/files/Biodiversity_Concepts.pdf

BEAN. (2009c). *Garlic Mustard Fact Sheet*. Retrieved from http://www.biodiversityeducation.ca/bean/files/GarlicMustardFactSheet.pdf

CIER. (2007). *Climate Change and First Nations South of 60: Impacts, Adaptation, and Priorities. Summary Report*. Retrieved from http://www.cier.ca/WorkArea/showcontent.aspx?id=1114

Cornell University. (n.d.). *All About Birds*. Retrieved from www.allaboutbirds.com

Environment Canada. (2006). *A Biodiversity Outcomes Framework for Canada*. Retrieved from http://www.cbin.ec.gc.ca/cadre-framework/default.cfm?lang=eng

Environment Canada (n.d. a) PlantWatch. Retrieved from http://www.naturewatch.ca/english/plantwatch/

Environment Canada (n.d. b). *PlantWatch Plant Guide*. Retrieved from http://www.naturewatch.ca/english/plantwatch/learn_plants.asp?Province=on

Environment Canada (n.d. c). *PlantWatch Field Observation Sheet*. Retrieved from http://www.naturewatch.ca/english/plantwatch/printable_observation_form.pdf

Free Range Studios. (n.d.). *The BioDaVersity Code*. Retrieved from http://www.freerangestudios.com/hi-resolution-video-downloads.html

Google SketchUp. (n.d.). *Welcome to Google SketchUp*. Retrieved from http://sketchup.google.com

Hinterland Who's Who. (n.d. a). *Create Shelter for Songbirds*. Retrieved from http://www.ffdp.ca/hww2.asp?id=177&cid=43

Hinterland Who's Who. (n.d. b). *Table 1 – Information on Nesting*. Retrieved from http://www.hww.ca/popups/english/nestbox/table1.html

Hinterland Who's Who. (n.d. c). *Table 2 – Information on Nesting*. Retrieved from http://www.hww.ca/popups/english/nestbox/table2a.html

Hinterland Who's Who. (n.d. d). *Construct and Maintain Nesting Boxes*. Retrieved from http://www.hww.ca/hww2.asp?id=196

HWW. (n.d. e) *Stewardship*. Retrieved from http://www.hww.ca/glossary_showword.asp?id=474&h=152

IPCC. (2007). Assessment Report 4, Synthesis Report, Annex II, Glossary. Retrieved from http://www.ipcc.ch/pdf/assessment-report/ar4/syr/ar4_syr_appendix.pdf

Miller, G.T. (2004). *Sustaining the Earth* (6th ed.). Toronto. Brooks Cole. p.28

National Energy Board. (2010). *Glossary of Terms*. Retrieved from http://www.one.gc.ca/clf-nsi/rpblctn/ctsndrgltn/rrggnmgpnb/lctrcty/lctrctyflngmnl-eng.html#glssr

Nature Canada (n.d. a). *Climate change and polar bears*. Retrieved from http://www.naturecanada.ca/climate_change_polar.asp

Nature Canada. (n.d. b). *Birds and Climate change*. Retrieved from http://www.naturecanada.ca/climate_change_birds.asp

Nielsen, Gary (n.d.) *Climate Change in Ontario: Communicating the Right Messages and Doing the Right Things*. Retrieved from http://www.creditvalleycons.com/bulletin/presentations/Climate%20change%20workshop%20Dec%2011%202008/Climate%20change%20in%20Ontario%20-%20communicating%20the%20right%20messages%20and%20doing%20the%20right%20things%20-%20Gary%20Nielsen.pdf p.34

Newcomb, Lawrence. (1977). *Newcomb's Wildflower Guide* (1st ed.). Boston – Toronto. Little, Brown & Company.

Ontario`s Expert Panel on Climate Change. (2009). *Adapting to Climate Change in Ontario*. Retrieved from http://www.ene.gov.on.ca/publications/7300e.pdf

Ontario Ministry of Natural Resources. (2005). *Ontario Biodiversity Strategy*. Retrieved from http://www.mnr.gov.on.ca/MNR_E000066.pdf

APPENDICES

Appendix A: Grade 9 and 10 Curriculum Links

Science, Grade 10 – Academic (SNC2D)

D. Earth and Space Science: Climate Change

D1. analyse some of the effects of climate change around the world, and assess the effectiveness of initiatives that attempt to address the issue of climate change;

D2. investigate various natural and human factors that influence Earth's climate and climate change;

D3. demonstrate an understanding of natural and human factors, including the greenhouse effect, that influence Earth's climate and contribute to climate change.D1. Relating Science to Technology, Society, and the Environment

Science, Grade 10 – Applied (SNC2P)

D. Earth and Space Science: Climate Change

D1. analyse effects of human activity on climate change, and effects of climate change on living things and natural systems;

D2. investigate various natural and human factors that have an impact on climate change and global warming;

D3. demonstrate an understanding of various natural and human factors that contribute to climate change and global warming.

Science, Grade 9 – Academic (SNC1D)

B. Biology: Sustainable Ecosystems

B1. Assess the impact of human activities on the sustainability of terrestrial and/or aquatic ecosystems, and evaluate the effectiveness of courses of action intended to remedy or mitigate negative impacts;

B2. Investigate factors related to human activity that affect terrestrial and aquatic ecosystems, and explain how they affect the sustainability of these ecosystems;

B3. Demonstrate an understanding of the dynamic nature of ecosystems, particularly in terms of ecological balance and the impact of human activity on the sustainability of terrestrial and aquatic ecosystems.

Science, Grade 9 – Applied (SNC1P)

B. Biology: Sustainable Ecosystems

B1. Analyse the impact of human activity on terrestrial or aquatic ecosystems, and assess the effectiveness of selected initiatives related to environmental sustainability;

B2. Investigate some factors related to human activity that affect terrestrial or aquatic ecosystems, and describe the consequences that these factors have for the sustainability of these ecosystems;

B3. Demonstrate an understanding of characteristics of terrestrial and aquatic ecosystems, the interdependence within and between ecosystems, and the impact humans have on the sustainability of these ecosystems.

Appendix B: Pre-Program Educator Resources

Video Links *

Biodiversity and Climate Change English Français

The links between biodiversity and climate change run both ways: biodiversity is threatened by human-induced climate change but, biodiversity resources can reduce the impacts of climate change on people and production (11 min).

Our World, Ontario English

This is earth…The only planet known to sustain life. An amazingly beautiful world. And this is Ontario. Our special place in this beautiful world. A place so diverse, it's really a world unto itself. Our world, Ontario. A world of wonders (8 min).

PDF Document Links **

Convention on Biological Diversity Presentation Climate Change and Biodiversity

Convention on Biological Diversity Technical Series

CBD Technical Series	List
CBD Technical Series 43	Forest Resilience, Biodiversity, and Climate Change - A Synthesis of the Biodiversity/Resilience/Stability Relationship in Forest Ecosystems
CBD Technical Series 42	Review of the Literature on the Links between Biodiversity and Climate Change – Impacts, Adaptation and Mitigation
CBD Technical Series 41	Biodiversity and Climate Change Mitigation and Adaptation
CBD Technical Series 29	Emerging Issues for Biodiversity Conservation in a Changing Climate
CBD Technical Series 25	Guidance for Promoting Synergy Among Activities Addressing Biological Diversity, Desertification, Land Degradation and Climate Change
CBD Technical Series 10	Interlinkages between biological diversity and climate change

Climate Change Adaptation in Ontario English Français

Birds and Climate Change: Ecological Disruption in Motion English

Web Links

Invasive Plants Are Beneficiaries of Climate Change in Thoreau's Woods English

MS Word Document Links ***

Learning for a Sustainable Future: Theme Documents

Theme Document List English Français

* Adobe Flash Player required.

** English only. Adobe Acrobat or Acrobat Viewer required

*** Microsoft Word or Word Viewer required

Appendix C: Biodiversity and Me Resources

The BioDaVersity Code Video

The YouTube link to this video was provided in the Biodiversity and Me section. This section provides links to the online MPEG file download at the Free Range Studios web site. BEAN's DVD version, which includes a simple menu screen, may be requested by contacting BEAN through its website www.biodiversityeducation.ca.

Climate Change and Polar Bears

The following information is excerpted from Nature Canada (n.d. a).

Polar bears are the world's largest land predators, and the most majestic creature of the Far North. But dramatic changes, caused by global warming, are taking place in the Arctic that threaten the survival of this spectacular species.

Global warming is melting the polar ice caps, robbing the bears of the ice floes they need to hunt prey. As the annual sea ice melts, polar bears are forced ashore to spend their summers fasting.

If the Arctic ice cap continues to melt sooner and form later, polar bears will become too thin to reproduce and they will become extinct by the end of this century.

The polar bear's home – the Arctic – is experiencing the effects of global warming more than any other place. Temperatures in the Arctic are rising at almost twice the rate of that of the rest of the world, and it is threatening to place the entire Arctic ecosystem in jeopardy.

The Arctic sea ice is shrinking by up to five per cent every ten years – sea ice that not only provides hunting ground for polar bears, but shelter and transportation for seals, walrus, arctic foxes, and the Inuit people. The underside provides a surface for algae that supports cod, char, beluga, and narwhal. The white sea ice also has a cooling effect on climate by reflecting light away from Earth's surface. As it melts, global warming advances even more quickly.

The United States designated the polar bear as threatened in May 2008. Canada's scientific Committee on the Status of Endangered Wildlife in Canada places them in a less serious category, as a species of special concern, and they are not included on Canada's official Species at Risk list.

Regardless of its current official status, the polar bear's habitat is under assault from the effects of our climate crisis, which, if not reversed, will mean the end of this iconic species within our lifetime.

The International Union for the Conservation of Nature added the polar bear to its "Red List" of the world's most imperiled wildlife in 2006. In 2009, the IUCN Polar Bear Specialist Group (PBSG) cited climate change as the greatest challenge to the conservation of polar bears, and concluded that 1 of 19 subpopulations is currently increasing, 3 are stable and 8 are declining. For the remaining 7 subpopulations available data were insufficient to provide an assessment of current trend.

Canada's greenhouse gas emissions have steadily risen since the country signed the Kyoto Protocol in 1997. These increases, and the global warming they cause, are a greater threat to polar bears than any other threat they face.

About the Polar Bear

Common Name: Polar Bear
Latin Name: Ursus Maritimus
Status: Special Concern (according to the Committee on the Status of Endangered Wildlife in Canada)

Size: Males are typically between two and three metres long and weigh up to 500 kg, though a few weigh as much as 800 kg. Females weigh between 150 to 250 kg.
Population: 22,000 to 27,000
Life Span: 20 to 25 years
Range: Most polar bears live in Canada, but other populations exist in Alaska, Russia, Greenland and Norway.
Threats: climate change, air pollution, oil spills, toxic chemicals

Greenhouse gases like carbon dioxide are necessary for life on this planet. But in the last 200 years, human activity has released more CO2 than our planet can handle – too many gases are remaining trapped inside our atmosphere, more than at any time in the last 800,000 years. These gases, which also include methane and nitrous oxide, are causing our planet to warm up – and the results of this global warming of our planet are becoming more dramatic every day.

Climate Change and Birds

The following information is excerpted from Nature Canada (n.d. b)

Climate change affects birds in different ways. It can alter distribution, abundance, behaviour, even genetic composition. It can also affect the timing of events like migration or breeding.

North America's most common birds are vanishing, and according to the US-based National Audubon Society, some of the most startling declines are among birds that rely on Canada's Boreal Forest.

Why are the birds disappearing?

Climate change can affect birds directly, through changes in temperature or rainfall. It can also lead to increased pressure from competitors, predators, parasites, diseases and disturbances like fires or storms. And climate change can act in combination with other major threats like habitat loss and alien invasive species, making the overall impact worse.

Because birds are one of the best studied groups of organisms, we already have the data needed to demonstrate that birds are being affected by climate change. This is occurring in a variety of ways.

How Our Changing Climate is Affecting Birds

1. Egg laying is occurring earlier.

One large-scale study showed that birds are laying eggs up at an average rate of 6.6 days earlier per decade. North American Tree Swallows are nesting up to 9 days earlier than 30 years ago, corresponding to an increase in average spring temperatures.

2. Migration times are shifting.

Birds are migrating earlier in the spring. A study of 63 years of data for 96 species of bird migrants in Canada showed that 27 species have altered their arrival dates significantly, with most arriving earlier, in conjunction with warming spring temperatures.

Birds also seem to be delaying autumn departure: in a study of 13 North American passerines, 6 species were found to delay their departure dates in conjunction with global warming.

Some birds in Europe are even failing to migrate all together.

3. Bird behaviour and their environment are becoming mismatched.

Much of a bird's life cycle and behaviour is closely linked to cues from the environment, like changing seasons. A mismatch occurs when birds cannot shift their behaviour, such as breeding times, enough to coincide with changes in environment, such as when prey is available.

Long-distance migrants are particularly at risk of a mismatch as it is harder for them to know what conditions might be like at the end of the migration route. For example, wood warblers in North America aren't migrating earlier from their neotropical wintering grounds, despite earlier springs in their northern breeding ranges – this risks a late arrival, after spring food sources on breeding grounds are gone.

4. Distributions are changing.

Bird populations are expected to shift poleward, or to higher elevations, to stay with their ideal temperatures as the climate changes.

A study of 35 North American warbler species found that the range of occurrence of seven of the species (Prothonotary Warbler, Blue-winged Warbler, Golden-winged Warbler, Black-throated Gray Warbler, Pine Warbler, Hooded Warbler, and Cape May Warbler) has shifted significantly north in the past 24 years, by an average of 65 miles. None of the birds shifted to the south.

Ontario Breeding Bird Atlas data demonstrates that "southern" birds species such as Tufted Titmouse, Blue-Gray Gnatcatcher, Northern Mockingbird, and Red-bellied Woodpecker have increased in number and have expanded their range northwards in Ontario compared to 20 years ago.

These climate-induced shifts are not always a solution to coping with a warming climate. Birds on the move could be stymied in their efforts to find new ranges by fragmentation, human development, or natural geological features like large bodies of water. 5. Ecological communities are disrupted

Global warming can change entire ecological communities. Food and nesting material that birds depend on may no longer be there. Birds may face new prey, parasites, competitors, and predators to which they are not adapted.

In the northern Hudson Bay area, mosquitoes now reach peak numbers earlier in the spring. Thick-billed Murres breeding in the area have not adjusted their behaviour, and the combination of heat and mosquitoes is causing higher egg loss and greater adult mortality.

Parts of northern Minnesota and southwestern Ontario may end up with 14 fewer species of warblers than are currently found there. This could lead to increased outbreaks of some forest pests like spruce budworms.

2005 saw unprecedented failures of colonies of seabirds on the Pacific coast of North America. Only 8% of the Cassin's Auklets nesting on Triangle Island were successful. This is because late northerly winds delayed coastal upwelling, which affected plankton growth and caused a decline in the fish species on which the seabirds depend.

Tufted Puffins at Canadian sites have breeding success near zero when water is at its warmest, which could mean that Canada's largest breeding colony for this species, Scott Islands, becomes unsuitable for Tufted Puffins as water continues to warm.

6. Extinction risks are on the rise.

Birds most at risk of extinction from climate change are those with restricted ranges, poor ability to move their range, small populations, or those already facing conservation challenges.

Migratory birds are particularly vulnerable to climate change effects, because they depend on multiple habitats and sites.

Arctic birds are particularly vulnerable – warming is occurring rapidly here, and at least 85 of the world's bird species breed in global Arctic regions. Vast areas of habitat, including tundra and sea ice, will be lost. Sea ice retreat could have severe consequences for Ivory Gulls, which forage along sea ice. Canadian Ivory Gulls have already declined in number by 90% over the past two decades.

Birds on the Move Show Significant Changes Underway

The following information is excerpted from Birds and Climate Change: Ecological Disruption in Motion (Audubon Society, 2009).

Analysis of four decades of Christmas Bird Count observations reveal that birds seen in North America during the first weeks of winter have moved dramatically northward—toward colder latitudes—over the past four decades. Significant northward movement occurred among 58% of the observed species—177 of 305. More than 60 moved in excess of 100 miles north, while the average distance moved by all studied species—including those that did not reflect the trend—was 35 miles northward. There was also movement inland, from warmer coastal states into areas not long accustomed to winter temperatures suitable for their new arrivals. The analysis found these trends among nearly every type of species; their sheer numbers and variety pointing to a powerful common force contributing to the movements.

Water Birds

More than half of the waterbird species (52%) moved north, including a wide variety of ducks, such as Red-breasted Merganser, American Black Duck, and Green-winged Teal. Waterbirds have benefited in recent years from less ice cover in northern and interior states, but future conditions under global warming scenarios are not promising—a hotter and drier climate will dry many wetlands that waterbirds require.

Coastal Birds

Coastal waterbirds did not move inland, primarily because they require saltwater or habitats found only near saltwater. However, many of these species (46%) still moved north, including the Black-bellied Plover and Black Turnstone (shorebirds), and Northern Gannet (a large fish-eating bird). The short-term health of many of these species is already in decline from development and the degradation of coastal habitats. These areas need significant protection and restoration. In addition, avian diets—not to mention seafood production—are threatened by the loss of food-rich ocean currents that disappear or become less predictable with global warming. Coastal habitats themselves are further threatened by sea-level rise associated with climate change.

Landbirds

Among all landbirds in the study, 64% showed significant northward movement, including more than 70% of all woodland birds and 70% of those that frequent feeders.

Feeder birds such as Pine Siskin, Boreal Chickadee, and Pygmy Nuthatch have moved hundreds of miles since 1966. Already adapted to human habitats, they are unusually well suited to a shifting climate. Most will fare well in the short term, as long as food is provided. However, northern-wintering birds are highly vulnerable to the sudden onset of cold and stormy conditions. They are also likely to further disrupt ecosystem balance by displacing less adaptable species.

Woodland birds that do not visit bird feeders, such as Spruce Grouse, American Three-toed Woodpecker, and Barred Owl, also showed long-distance northward movements. Their continued success in northern winters will depend on healthy forest habitat, which is already at risk due to both the drying effects of global warming and over-exploitation by humans.

Grassland birds including Eastern Meadowlark, Vesper Sparrow, and Burrowing Owl are among the few groups that did not move north over the past 40 years. Only 10 of 26 (38%) grassland species moved north significantly, while nine moved south. Most probably could not move into northern areas despite increasingly moderate temperatures because conversion to intensive human uses such as row crops, pastures, and hayfields has greatly reduced availability of grassland habitat. In combination, global warming and ongoing overuse of grasslands by humans will doom grassland birds to continued population declines if we fail to take corrective actions.

Climate Change, Indigenous Peoples and Biodiversity

The following information has been excerpted from Biodiversity Concepts (BEAN, 2009b) and Climate Change and First Nations South of 60: Impacts, Adaptations, and Priorities (CIER, 2007).

Human cultural diversity and biodiversity are linked. Intact indigenous cultures living traditional lifestyles require an intact, functioning ecosystem, and are threatened by the loss of biodiversity and attendant ecosystem goods and services.

First Nations, along with other Aboriginal and northern communities, will likely be one of the most profoundly impacted populations within Canada by climate change. Given the diversity of ecosystems, vulnerabilities and social, economic and cultural characteristics of First Nations across Canada, it is important that each First Nation determine how they will be uniquely affected by climate change. Once First Nations south of 60 degrees latitude have identified potential impacts (using existing scientific information, Indigenous Knowledge and local realities), they will need to prepare and implement adaptation projects to reduce their vulnerability. Proactive adaptation measures can decrease the magnitude of future stresses, reduce the amount or intensity of stress felt by the community and be less costly over the long-term when compared to reactive measures...

Impact one: changes to ice due to warmer weather

- Changes to the timing of freeze-up and thaw; often the fall freeze-up occurs much later and spring thaw occurs earlier than it has in the past
- Changes to the length of the freeze-up period; areas with continuous freeze-up period now experience intermittent thawing
- Change in the thickness of the ice throughout the winter; thinner ice intermittently or for the whole season

Likely Vulnerabilities/Sensitivities in First Nations

- Decreased safety on the land for people travelling between communities or for subsistence activities
- Resulting decrease in cultural subsistence activities and loss of Indigenous Knowledge and the associate traditional language about these practises
- Decreased health of First Nations who rely on wild foods, as they will be forced to purchase more market foods
- Negative social impacts by decreased ability of First Nations, who rely on ice and snow for transportation, to travel to other communities
- Increased costs of transporting goods (housing supplies, food, fuel) by air or barge due to shorter winter road season

Adaptations

1) Develop community communication networks (hazards mapping; monitoring community trails, etc)
2) Develop land camps to strengthen Indigenous Knowledge, maintain traditional skills and values
3) Build and maintain more cost intensive winter roads that will extend their seasonal life, such as the construction of permanent stream crossings

4) Extend airstrips in remote communities to accommodate larger planes to address a shorter road access season

Impact two: changes to water quantity and quality

Changes in water quantity:
- Declining water levels in lakes and streams due to factors such as increased temperature, decreased snow cover, and receding glaciers
- Increased water quantity in some areas from increased precipitation and sea level rise

Decrease in water quality:
- Damage to water reservoirs to thawing permafrost
- Contamination of freshwater sources from storm surges and sea level rise on the coast, flooding, and extreme weather events in other areas
- Increased concentrations of contaminants (such as PCB's, heavy metals, mercury, pharmaceuticals, and pesticides), nutrient additions (from agriculture and wastewater) and water borne diseases due to declining water levels and increased temperatures

Likely Vulnerabilities/Sensitivities in First Nations
- Negative affects to water quality from climate change will exacerbate existing water problems in First Nations
- Increased costs to obtain quality drinking water through either enhanced water treatment infrastructure or outsourcing drinking water, which would be intensified in Northern communities
- Negatively impact First Nation cultural uses of water such as subsistence harvesting of traditional foods and medicines or ceremonial practises

Adaptations
1) Protect and manage source water
2) Improve water conservation to decrease total water consumption through conservation initiatives, public education programs, and water-costing mechanisms
3) Initiate wetland conservation, protect and re-vegetate riparian zones
4) Incorporate climate change impacts when planning or designing sewage and water and treatment facilities; use higher levels of wastewater treatment (from primary to secondary or tertiary levels); implement more stringent water treatment guidelines
5) Water management using a watershed approach

Impact three: changes in animals behaviour / loss of keystone species

Climate change will affect animal behaviour by altering the location and timing of life cycle events such as migration and reproduction (e.g. calving or spawning). As animal species respond to these environmental changes, this transition may result in decreased species' health (increases in diseases or physical abnormalities), safety (due to unsafe land) and survival (effects on birthing or survival of young, unavailable food source). As animals and plants respond to the changing environmental conditions, this could lead to a loss of keystone species in ecoregions.

Likely Vulnerabilities/Sensitivities in First Nations
- Decreased health or loss of plants and animals in an areas previously accessed by First Nations
- Negative impacts to culture: loss of knowledge about certain animals and plants, landscapes, and waterways, and the language associated with these practises
- Loss of food security for First Nations who rely on wild plants and animals for food and medicine and decreased health of First Nations who will have to depend more on store-bought foods

- Safety issues for First Nations if more dangerous animals move into areas used by First Nations
- Loss of economic opportunities such as ecotourism and guiding or outfitting

Adaptations

1) Habitat or species conservation; conserve or restore migration corridors; minimize landscape fragmentation
2) Change regulations to sport and commercial fishing, such as catch-and-release only, to decrease allowable catch or establish moratoriums on some fish
3) Build on social networks; share wild foods with community members (Elders, disabled people); develop food / freezer co-op in community
4) Ensure healthy diet transitions for First Nations who need to switch their reliance on wild foods, completely or partially, to market foods

Impact four: increase in frequency and severity of extreme weather events

Scientists predict that extreme weather events such as storms (wind, ice, thunder, and snow), floods, and droughts will occur more intensely and more often than has occurred in the past.

Likely Vulnerabilities/Sensitivities in First Nations

- Increased costs to respond to the weather events (snow removal and clean up of debris) and replace or repair damaged goods
- Loss or damage of infrastructure and property (on-reserve buildings, boats, equipment) including culturally important infrastructure such as cabins or other buildings along traplines; potential loss of important cultural sites
- Increased frequency of service loss (hydro, gas, telephone) and closures (road, business, school)
- Stress on emergency services, such as hospitals
- Heightened risk to human and animal life
- Loss of opportunities to engage in traditional or subsistence activities due to increased unpredictability and decreased safety
- Loss of economic opportunities in areas such as tourism, forestry, fishing, or agriculture

Adaptations

1) Incorporate the potential for extreme weather events in land management
2) Redefine construction standards for zoning, planning and building codes (e.g. move buildings and infrastructure out of flood prone areas)
3) Plan for emergency preparedness
4) Build network of cabins to provide shelter for hunters and travellers that get caught in extreme weather events
5) Use larger, more powerful sea-worthy boats and snowmobiles for harvesting and transportation
6) Install storm retention ponds in the storm drainage network for extreme rain; or use silt fences, tarping soil, and fill stockpiles to help minimize damage from storms

Appendix D: Tipping Point Resources

Sample impacts and mitigation round statements:

After the practice round is complete, the impact and mitigation round can begin. The interpreter may make statements such as:

We start this round as a healthy ecosystem. All the components of biodiversity are interacting smoothly and the system is in equilibrium (lead two shifts)

IMPACT: A highway (or pipeline, or similar impact) is built through our ecosystem. Two people on each side sit out back for this round, as shown in Figure 2. Now we can see the highway (or similar) cut through our ecosystem. We have to try to get all the way across the highway to keep the system in equilibrium (lead two or more shifts, preferably in one direction only, so that different participants get the experience of having to cross the 'highway' to keep the next stick upright).

ADAPTATION: Next, community volunteers have planted some trees, shrubs and plants, making a forested corridor that connects two forest fragments, helping restore system resilience. The people that stood the last shift out can step back in (lead a couple of shifts).

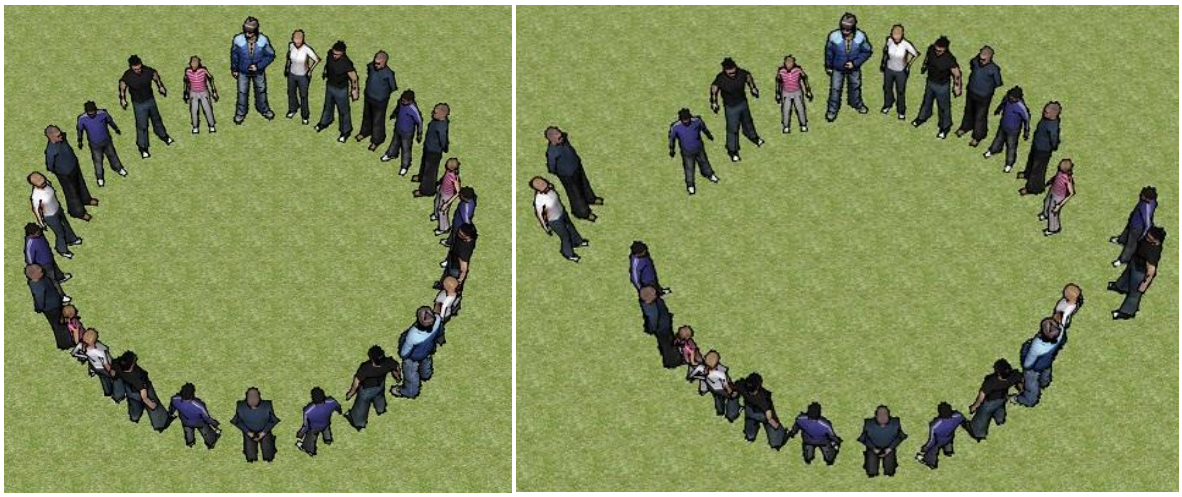

Figure 2 **- Ecosystem impacts represented by students on each side of the circle stepping back.**

IMPACT: Local ash trees are expected to die from infection by invasive insect pest the Emerald Ash Borer. Ten percent of the urban forest's carbon storage and shading will be lost within a decade (have 10 percent of the circle step back and lead a couple of shifts).

ADAPTATION: City managers and volunteers calculate and plant a high enough number of diverse, native trees on City property, so that in ten years, the new young trees will provide more carbon storage than the lost ash trees (bring the ten percent back in and lead a shift).

Sample impact round statements:

IMPACT A: Climate change has allowed an invasive insect pest to survive warmer winters in the forest. Some of the affected trees die. Everyone in a green shirt sits out this round (lead two shifts)

IMPACT B: With fewer trees cleaning the atmosphere, air quality goes down. Diseases like asthma increase and human mortality increases. Everyone in a black shirt sits out this round (lead two shifts)

IMPACT C: Warmer weather has allowed mosquito-borne illnesses such as West Nile virus to travel further north than its usual range. More human and wildlife fatalities occur. Anyone in a grey shirt sits out this round

Sample mitigation round statements:

MITIGATION A: Communities realize that resilient, biodiverse ecosystems are essential to well-being, and organize a variety of ecosystem restoration projects. Everyone in a green shirt can step back in.

MITIGATION B: Communities get serious about climate change and start walking and cycling more, using public transit and electric cars for longer distances, and investing in local renewable energy projects. Air quality improves and human communities are healthier. Everyone in a black shirt step back in.

MITIGATION C: The public is educated about preventing West Nile virus and works to rotate any standing water such as birdbaths, and put protective on backyard rain barrels. Half the participants in grey may rejoin the circle. The community decides not to use pesticides targeted against mosquitoes. The rest of the participants may rejoin the circle.

Appendix E: Big Picture Resources

On the back of a white or light Bristol board sheet, measure out a 4 x 5 grid in light pencil. Print out one sheet of challenge labels for use loading the challenge cartridges (one time). Print out one sheet of labels for each group. On the back of the Bristol board, attach a challenge label to each square of the 4x5 grid. Layout suggestion: one row per team.

When coming up with challenges Ontario sites, interpreters are advised to keep it simple, using the same challenge for all groups at each station. Open ended questions are useful, so that collectively, the group has to come up with multiple answers. Challenge questions should not be generic. Interpreters will need to explore local areas to find similar examples. The biodiversity identification aspects are important, as are the conjectures about what can happen to different local environments in the context of climate change. For most of the sample challenges listed below, no materials beyond the challenge stations themselves were required. For the conifer challenge, students were given laminated sheets detailing Eastern Hemlock, Eastern White Cedar, Red Pine and White Spruce, and had to determine that the dominant tree in the area was White Spruce.

Sample challenges:

Conifer Challenge
Healthy, biodiverse forests help fight climate change, and are better at surviving climate change impacts.

Look at the evergreens around you, and count the number of different types. Select the most common one you see. Use the sheets provided to identify your tree.

Bring the interpreter one small (max 5cm) sample and report which species you have found.

Is the biodiversity here high, or low? Why is this important when we think about climate change?

Swallowville Challenge
Birds that nest in hollowed-out trunks of mature trees are called 'cavity-nesting birds'.

As mature forest areas are lost to agriculture and construction, the survival of cavity nesting birds, like the Tree Swallow, is at risk.

People build nesting boxes to help. Is that enough? Suggest a link between habitat loss and climate change. Propose an action to help combat the loss of habitat and climate change.

Lookout Challenge
Most of Ontario's wetlands have been converted to other uses, such as farming.

The wetlands we have left provide a rich variety of benefits, including fighting climate change, through their ability to store greenhouse gases such as carbon dioxide.

Suggest a way that climate change could affect this wetland's health and its benefits to humans.

Sugarbush Challenge A
You are about to enter the Sugarbush, where maple syrup is made from the sap of sugar maple trees. Examine your station's tree. Is it coniferous (evergreen) or deciduous?

Compare your station tree to the other teams' trees. Are they the same, or different? How, or why?

Report your findings to the interpreter. Proceed to the next station to complete the Sugarbush Challenge.

Sugarbush Challenge B
You are now in the Sugarbush. At this station, repeat the exercise from the last station - is your tree coniferous, or deciduous?

Compare your station tree to the other teams' trees. Are they the same, or different? How, or why?

Imagine that due to climate change, a new insect pest can survive warmer Ontario winters. The insect will only affect one tree type in each ecosystem. Which station would lose the most trees? What could be lost if affected trees die?

Appendix F: Stewardship/Nesting Box Resources

This nest box will accommodate bluebirds, tree swallows, chickadees, starlings, house sparrows and more, including deer mice and flying squirrels. Non-migratory chickadees, invasive starlings and invasive house sparrows can be excluded by covering the entrance hole until bluebirds and tree swallows arrive in the area. This pattern includes a long back panel for secure mounting, ventilated side panels to help keep heat down in summer, drain-vented floor panel, sloped roof to shed rainwater, and a swinging front panel to accommodate cleaning in early spring and between broods.

Using scrap wood for your nesting boxes can reduce waste and material costs. Lumber yards may provide scrap lumber at a discounted rate, of by donation. Waste-exchange services in many Canadian municipalities also supply reusable lumber at nominal prices or free of charge (Hinterland Who`s Who, n.d. a).

If using purchased lumber, a nominal 1”x12”x8’ rough cut Spruce-Pine-Fir (SPF) board provides enough material for three of these next box kits. Use a table saw to divide the board, or scraps of similar material, into kits. Figure 3 shows an optional layout for dividing a 1”x12”x8’ board into three next box kits:

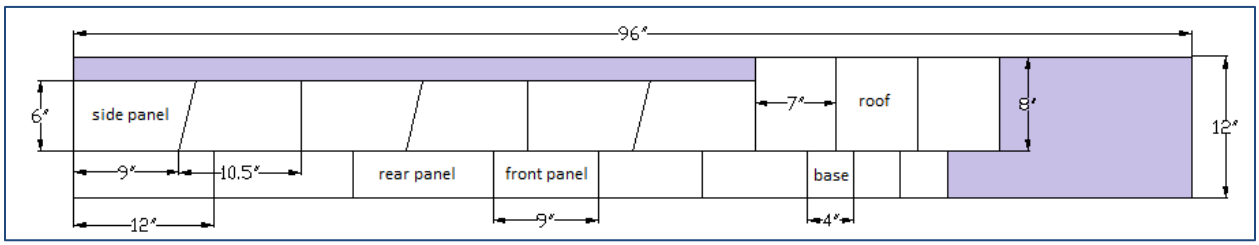

Figure 3 **- One possible layout of pieces for a 1"x12"x8' rough cut board**

This plan includes three 4x12” back panels, three 4x9” front panels, three 4x4” floor panels, three pairs of angled side panels, and three 8x7” roof panels. Boxes require drainage, ventilation, and screw holes, including mounting, entry and pilot holes, pre-drilled. Figures 4 through 9 show locations and sizes of drill holes required. Please note that Figure 8 shows a pilot hole for just one side of the base. Pilot holes are needed on both sides of the base and the back.

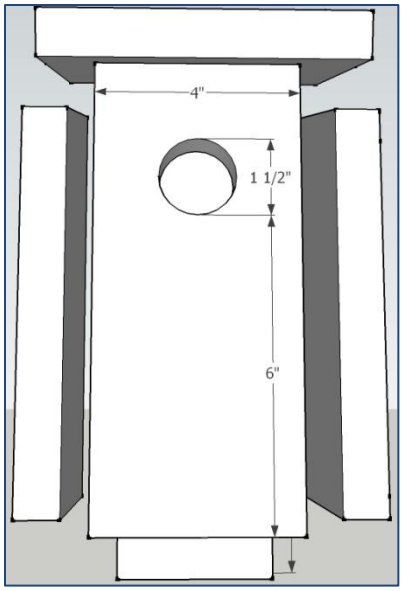

Figure 5 **- Nest box front 1 ½" entry hole**

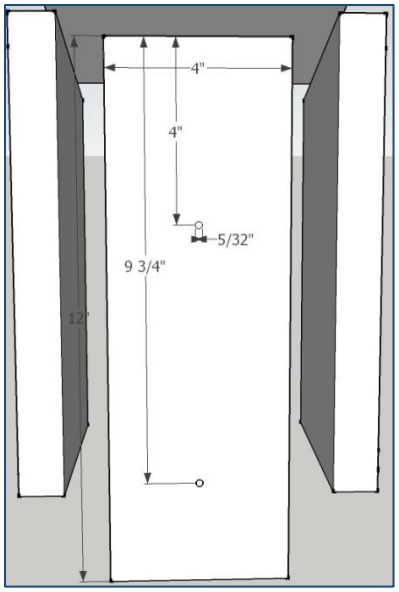

Figure 4 **- Nest box rear panel 5/32" mounting screw drill holes**

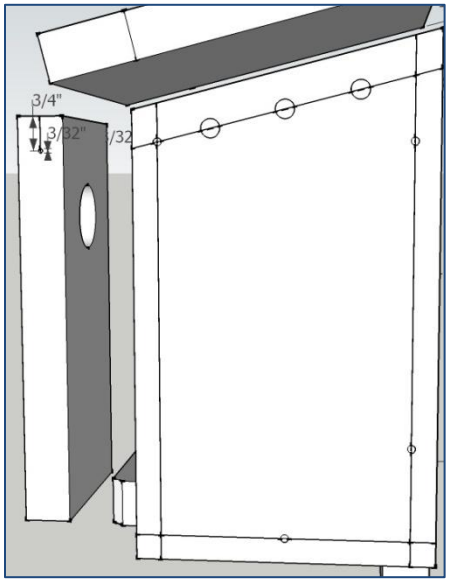

Figure 6 **- Nest box left side, absent bottom left 5/32" screw hole; top of door 3/32" pilot hole**

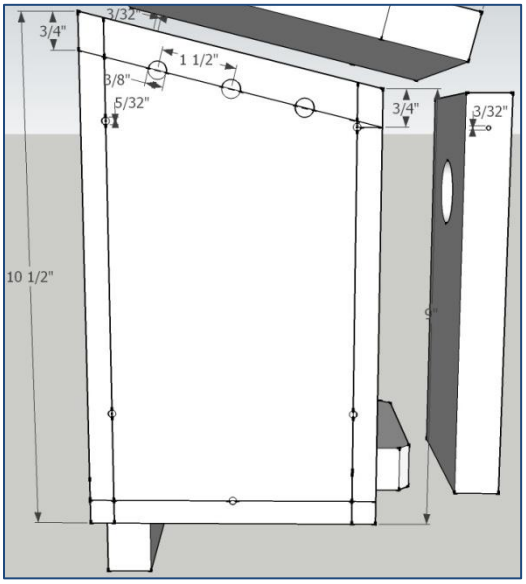

Figure 7 **- Nest box side panel 3/8" vent and 5/32" screw holes**

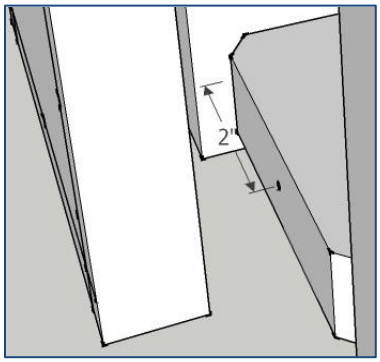

Figure 9 **- Nest box base drain cuts and one 3/32" pilot hole**

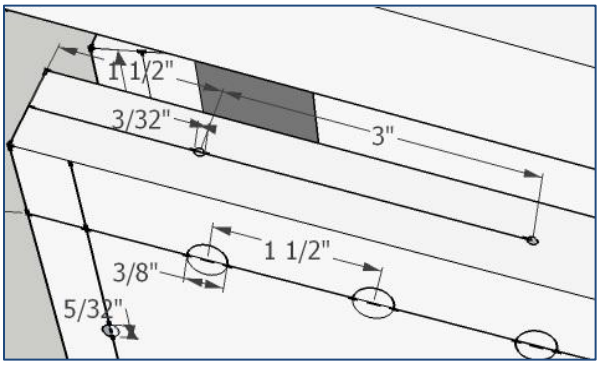

Figure 8 **- Top of nest box side, pilot holes for roof screws**

Having a dismantled kit available to use as a template for drilling kits over the long term, can be useful. Figure 10 shows a scrap lumber nest box kit, pre- and post-assembly.

Figure 10 **- Scrap lumber nesting box kit, in pieces and assembled**

The 3D model depicted in the figures above is available by request from BEAN through its website www.biodiversityeducation.ca, should program users wish to use and/or modify design dimensions. Google SketchUp (n.d.), a free 3D modeling software application available via download, was used to create the 3D model.

The following tables, showing species nesting characteristics and nesting box dimensions, have been adapted from Hinterland Who`s Who (n.d. b; n.d. c)

Table 1 – Nesting Characteristics

Species	Average territory (#pr/ha)	# eggs / clutch	Incubation period (d)	Age when young leave the nest (d)
House Wren *(Troglodytes aedon)*	2 — 3	6 — 8	13	12 — 18
Chickadee *(Poecile atricapillus)*	3 — 5	6 — 8	12	16
Nuthatches *(Sitta **spp**)*	3 — 5	5 — 9	12	18
Downy Woodpecker *(Picoides pubescens)*	3 — 5	3 — 5	12	24
Eastern Bluebird* *(Sialia sialis)*	2 — 3	4 — 5	12	15 — 18
Tree Swallow *(Tachycineta bicolour)*	20	4 — 6	14	16 — 20
House Sparrow**	10	4 — 6	12	12 — 14
Red-headed Woodpecker *(Melanerpes erythrocephalus)*	5	4 — 7	14	25 — 28
Hairy Woodpecker *(Picoides villosus)*	2 — 3	3 — 6	14	24 — 28
Great Crested Flycatcher *(Myiarchus crinitus)*	2 — 3	4 — 8	15	13 — 15
Starlings				
Common Flicker *(Colaptes auratus)*	5	6 — 8	14 — 16	25 — 28
Bufflehead *(Bucephala albeola)*	2 — 3	6 — 11	29	1 — 2
Screech owls *(Megascops asio)*	2 — 3	4 — 5	26	24 — 26
American Kestrel *(Falco sparverius)*	2 — 3	4 — 5	28	24 — 26
Wood Duck *(Aix sponsa)*	5	10 — 15	29	1 — 2
Hooded Merganser *(Lophodytes cucullatus)*	5	10 — 12	31	1 — 2
Common Goldeneye *(Bucephala clangula)*	5	10 — 12	31	1 — 2
Purple Martin *(Progne subis)*	120 — 125	4 — 5	12	15 — 18

* Shaded text indicates species selected for next box program

** Red text indicates non-native nest competitors

Table 2 - Nesting Box Specifications

Species	Entrance hole diameter (cm)	Width of floor panels (cm)	Height of wall panels (cm)	Min. height above ground (m)	On pole or tree near shrubs	On pole or tree in open areas
House Wren	2.5	10 x 10	15	1.8	yes	—
Chickadees	3.1	10 x 10	20	1.8	yes	—
Nuthatches	3.1	10 x 10	20	1.8	yes	—
Downy Woodpecker	3.1	10 x 10	20	1.8	yes	—
Eastern Bluebird*	3.8	13 x 13	25	2.1	—	yes
Tree Swallow	3.8	13 x 13	25	2.1	—	yes
House Sparrow**	3.8	13 x 13	25	2.1	—	yes
Red-headed Woodpecker	4.4	13 x 13	31.3	3	—	yes
Hairy Woodpecker	5	12.5 x 12.5	31.3	3	—	yes
Great Crested Flycatcher	5	12.5 x 12.5	31.3	3	—	yes
Starlings						
Common Flicker	6.3	15 x 15	37.5	3	—	yes
Bufflehead	6.3	15 x 15	37.5	3	—	yes
Screech owls	7.5	20 x 20	42.5	4.5	—	yes
American Kestrel	7.5	20 x 20	42.5	4.5	—	yes
Wood Duck	7.5 x 10 oval	25 x 25	50	2.4	yes	yes
Hooded Merganser	7.5 x 10 oval	25 x 25	50	2.4	yes	yes
Common Goldeneye	7.5 x 10 oval	25 x 25	50	2.4	yes	yes
Purple Martin	5	15 x 15*	15	2.4	—	yes

* Shaded text indicates species selected for next box program

** Red text indicates non-native nest competitors

The handout information on the page following, is excerpted from Cornell Lab of Ornithology All About Birds web site (Cornell University, n.d.)

Eastern Bluebird and Tree Swallow Information

Eastern Bluebird *(Sialia sialis)*

Habitat: Eastern Bluebirds live in open country around trees, but with little understory and sparse ground cover. Original habitats probably included open, frequently burned pine savannas, beaver ponds, mature but open woods, and forest openings. Today, they're most common along pastures, agricultural fields, suburban parks, backyards, and golf courses.

Migration: Bluebirds who breed in Ontario, winter in the southeastern U.S. or Mexico. Eastern Bluebirds from the southeastern U.S. may not migrate at all, but remain resident all year round.

Diet: Insects caught on the ground are a bluebird's main food for much of the year. Major prey include caterpillars, beetles crickets, grasshoppers, and spiders. In fall and winter, bluebirds eat large amounts of fruit including sumac, dogwood, and juniper berries. Rarely, Eastern Bluebirds have been recorded eating salamanders, shrews, snakes, lizards, and tree frogs.

Tree Swallow *(Tachycineta bicolour)*

Habitat: Open areas near water and fields, especially wooded swamps and shorelines. Tree swallows are tree cavity nesters. Natural sites are in decline. The nest box kit we are assembling today will accommodate both Tree Swallows and Eastern Bluebirds.

Migration: Breeds in North America. Winters in southern US, Mexico, Central America

Diet: Flying insects and some berries.

Appendix G: Invasive Alien Species Removal Resources

Interpreters who wish to implement the Garlic Mustard Removal and Disposal Protocol may request a copy by visiting the Biodiversity Education and Awareness Network (BEAN) web site at www.biodiversityeducation.ca. Please indicate when doing so, that the Big Picture on Biodiversity and Climate Change is being implemented, and for what location.

The following information is excerpted from the Biodiversity Education and Awareness Garlic Mustard Fact Sheet (BEAN, 2009c)

The Plant: Garlic Mustard is a cool-season, biennial (i.e. two-year growth cycle) herb with stalked, triangular to heartshaped, coarsely toothed leaves that give off an odour of garlic when crushed (particularly new leaves). Figure 11 shows the various stages of growth and components of the garlic mustard plant.

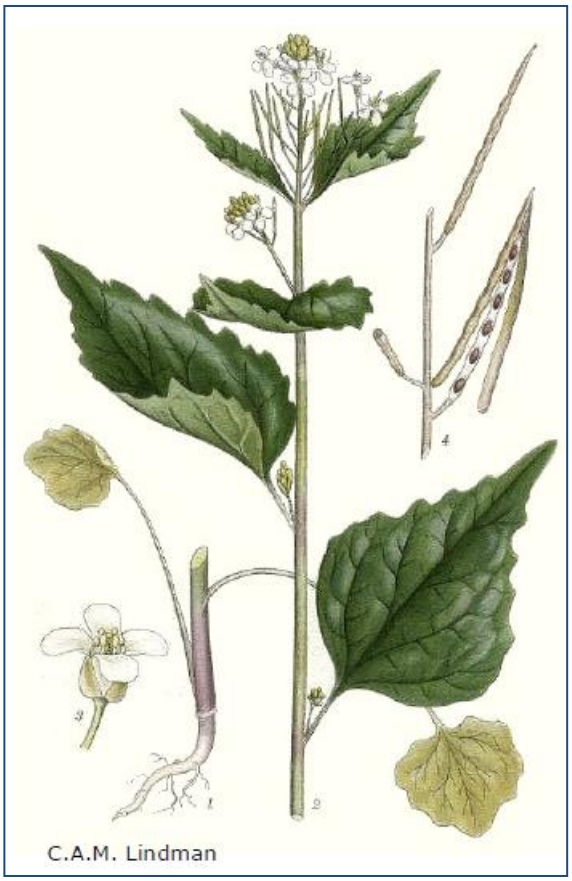

Figure 11 **- Garlic Mustard, showing first and second year leaves, flowers, seedpod, seeds, and root.**

First-year plants appear only as a cluster of green leaves close to the ground. Clusters remain green through the winter and develop into flowering plants the following spring. Flowering plants of Garlic Mustard reach from 0.6 to 1 m in height and produce button like clusters of small white flowers, each with four petals in the shape of a cross. Flowers are either self-pollinated, or pollinated by insects.

Beginning in May, tiny seeds are produced in erect, slender pods, and become shiny black when mature. Seedpods may hold fertile seed through the summer. In dense woodland stands, seed production can range from 9,500 to over 100,000 seeds per square metre per year.

When mature, the capsules burst open and can throw seeds several metres. Further distribution is mostly by humans and other animals accidentally carrying seeds, or mud containing seeds. Seeds aren't easily blown around, and do not float well. Populations spread an average of 5.4 m/year, which may not sound like a lot until you add it up: 6,400 km2/year in North America! Because it's primarily carried by humans and animals, natural or human-made roads and trails become prime corridors for invasion. Seeds quickly sprout in disturbed soil, and disturbing soil with seeds in it will cause more seeds to sprout. Seeds can remain alive in the soil for five years or more.

The Threat: Garlic Mustard is one of the few non-native herbs able to invade and dominate both disturbed and undisturbed forest understory communities. Its ability to grow in low light, high seed production, and relatively rapid spread make Garlic Mustard a strong competitor, dominating forest groundcover within 5-7 years of introduction. It takes resources away from native spring woodland plants such as Spring Beauty, White Trillium, Trout Lily, Sweet Cicely and many others. Because it begins growing very early in the spring, Garlic Mustard has a head start on other flowering plants and tree seedlings.

It also changes the soil, impacts natural associations between plants and fungi by destroying the fungi, and changes the forest ecosystem. Several chemicals produced by Garlic Mustard reduce the growth of grasses, herbs and tree seedlings, including Sugar Maples. Researchers in Ohio removed Garlic Mustard from a forest understory and found that the richness and abundance of annuals and woody perennials, including tree seedlings, increased.

Garlic Mustard appears to reduce habitat quality for several species of salamanders and molluscs through changes in forest litter layer depth and composition. Insect communities are also impacted by the presence of Garlic Mustard. The impacts of Garlic Mustard on vertebrates are largely unknown. Deer do not eat it, but encourage its spread by grazing on native competitors, disturbing the soil, and carrying seed from one location to another.

Management Efforts: Garlic Mustard spreads from established (core) infestations along an invasion front. Satellite infestations occur when seeds are transported to new areas. This often occurs along trails, roads or forest edges. Priority should be given to annual removal of all satellite infestations to prevent further spread.

In addition, satellite areas and invasion fronts nearest to or within prime native habitat should have top priority. After these areas are treated, begin working back through the invasion front.

Monitoring should focus on areas where Garlic Mustard seeds are likely to be dispersed and find disturbed areas suitable for germination. Trails, parking areas, transportation corridors and recreation sites in suitable habitats are known sites of early infestation.

There are a number of approaches to removal:

1. Cutting flowering plants near ground level by hand will kill a high percentage of Garlic Mustard plants. The lower the cut, the more effectively the plant will be killed. Because cutting does not remove the root crown, it may be necessary to cut multiple times in a season to prevent seeds from developing on secondary stems. If cut precisely after flowering and before seed maturation (when the stem becomes tough and fibrous), resprouting is less likely. Even though cutting does not disturb the soil, it may still be necessary to cut for at least five consecutive years or until the seed bank is exhausted, but less regrowth might be expected than with pulling.

2. Pulling individual Garlic Mustard plants by hand is a simple and effective approach to managing small or isolated infestations. However, Garlic Mustard prefers and can rapidly spread in disturbed areas. Because pulling disturbs the soil, seeds remain alive in the soil for at least five years, and root fragments may regenerate plants, it is important to pull all Garlic Mustard plants in an area every year until the seed bank is exhausted and seedlings no longer appear. This may require multiple efforts each year as rosettes can continue to grow and produce flowers over an extended period (April-June).

3. Pulling, treating and transplanting. If you combine pulling with soil treatment, for example the use of clean mulch, and the transplanting of native species back into the area, you may be able to reduce the number of years it takes to exhaust the seed bank and re-establish native species.

4. Other methods. In limited, very controlled situations, fire or herbicides may be used by experts in the use of these methods. Of course, the best approach would be to limit the spread of Garlic Mustard in the first place. People should be told about the plant and how it's spread, asked to restrain dogs in invaded areas, and encouraged to brush off any bits of mud or vegetation from clothing, boots or paws before leaving the area.

Appendix H: Stewardship/PlantWatch Resources

In general, select a typical patch of plants to conduct PlantWatch observations. If the plants are very abundant, mark off a 1-metre-square section to observe. Ensure that any monitoring sites are a minimum of 10 metres away from any building or other obstacle, and free from danger of mowing. PlantWatch observation sheets can be obtained at the PlantWatch web site

The following identification keys (two formats) have been developed in the style of Newcomb's Wildflower Guide (1977). When no flowers are present, in this simplified key students should be able to select characteristics for plant type and leaf type, and then work back to determine flower type and identify the plant and record their observations. Students may record observations throughout the season, however observations should only be submitted to the PlantWatch data management system at the specified points.

To use this key, select a number for Plant type and Leaf type. Match the sequence of number codes to an item or items in the locator key. For example, if observing a shrub (5) with lobed leaves (3) then the last two numbers will be 53. The locator key indicates species 2 is being observed. Species 2 in the list is the Common Lilac.

PlantWatch Key

Flower type

1. Flowers with 3 regular parts
2. Flowers with 4 regular parts
3. Flowers with 5 regular parts
4. Flowers with 7 or more regular parts

Plant type (see table to right)

1. Wildflowers with no apparent Leaves
2. Wildflowers with Basal Leaves only
3. Wildflowers with Alternate Leaves
4. Wildflowers with Opposite or Whorled Leaves
5. Shrubs

Leaf type (scan in lobed, toothed, entire, divided)

1. No apparent Leaves
2. Leaves entire
3. Leaves toothed or lobed
4. Leaves divided

Basal leaves 	**Entire** 
Alternate leaves 	**Toothed** 
Opposite leaves 	**Lobed** 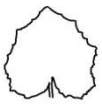
Whorled leaves 	**Divided** 

Locator Key

411. Flowers with 7 or more regular parts, no apparent leaves at flowering time	# 1
253. Shrubs with flowers having 4 regular parts, leaves opposite and lobed	# 2
423. Flowers with 7 or more regular parts, having toothed basal leaves	#3
142. Flowers with 3 regular parts, having whorled, entire leaves	# 4
323. Flowers with 5 regular parts, having basal toothed leaves	# 5

Plant and Observation Details

1. Coltsfoot (*Tussilago farfara*)* **Bloom time**: March – May. Yellow flower heads appear before the leaves, on solid, hairy stems. Leaves appear later and are roundly heart-shaped, toothed, and shallowly lobed. This herb prefers damp soil of streamsides, banks and waste places. Observation times: **First bloom**: when the first flowers are open in the observed plants. **Mid bloom**: when 50% of the flowers are open in the observed plants.	
2. Common Purple Lilac (*Syringa vulgaris*)* **Bloom time:** May – June. Small fragrant flowers (florets) grow in clusters 10-20 cm long. Heart-shaped leaves are smooth and appear before the flowers bloom. Lilac bushes grow where they have been planted, such as in parks and gardens; but this introduced plant does not grow successfully in the arctic. Observation times: **First bloom**: when the first florets are open on the observed shrub (3 places). **Mid bloom**: when 50% of the florets are open on the observed shrub. **Leafing**: when the first leaves push out of the bud and unfold completely (3 places). ***PlantWatch Pointer*** If possible, select a lilac bush that has pale to medium purple buds.	
3. Dandelion (*Taraxacum officinale*)* **Bloom time:** April – June. Flower heads are yellow and the flower stem is hollow and leafless. Deeply toothed leaves grow from the base of the plant, appearing before the flowers. Dandelions grow almost anywhere, but are common in cultivated areas and wastelands. Observation times: **First bloom**: when the first flowers are open in the observed plants. **Mid bloom**: when the first seed-head opens, forming a white, fluffy ball of seeds.	
4. Trillium (*Trillium grandiflorum*) **Bloom time:** April – May. Three distinctive white petals form a single white flower up to 10 cm across, which turns pink as it ages. Three oval leaves on each plant, which taper gradually to a point. Trilliums are found in rich, moist, well-drained woods and wet areas at low to mid-elevations. Observation times: **First bloom**: when the first flowers are open in the observed plants. **Mid bloom**: when 50% of the flowers are but have not yet started turning pink. ***PlantWatch Pointer*** If possible, select a patch of trilliums next to a trail so that you can make observations without stepping on growing plants.	
5. Wild Strawberry (*Fragaria virginiana/vesca*) **Bloom time**: April – May. Each plant has three-to-five white five-petaled flowers. Leaves grow from the stem base and are divided into three, deep-toothed leaflets, that appear before the flowers. Found in abandoned fields, along roads and in open woodlands. Observation times: **First bloom**: when the first flowers are open in the observed plants. **Mid bloom**: when 50% of the flowers are open in the observed plants.	

* Asterisk indicates non-native species

The above species have been selected and details excerpted from the PlantWatch Ontario web page. If not ideal for your area, please refer to full list of Plant Watch options for Ontario (Environment Canada, n.d. b).

See following pages for a flip chart ID key format. To use this guide, print out pages 35 and 36. Trim along outer dashed lines. Fold each page along centre dashed line. According to white circular markings, punch small holes through both sides of each sheet. Place both folded sheets into one 8 ½" x 11" laminate pouch. Laminate. Trim into eight (8) separate double-sided sheets. Repeat hole punches in

each. Place in sequence and secure the booklet with a pair of key rings or similar. This guide was created with Microsoft Publisher. An electronic copy of this file may be requested from the Biodiversity Education and Awareness Network via the web site www.biodiversityeducation.ca.

The PlantWatch Observation Sheet for Ontario on page 37 is a fillable Word form, adapted from the PlantWatch Field Observation Sheet (Environment Canada, n.d. c).

The Big Picture

PlantWatch

ID Key

Flower type

1. Flowers with 3 petals
2. Flowers with 4 petals
3. Flowers with 5 petals
4. Flowers with 7+ petals

Plant type (see table to right)

1. Wildflowers, with no leaves
2. Wildflowers, with basal leaves
3. ...with alternate leaves
4. ...opposite/whorled leaves
5. Shrubs

Leaf type

1. No apparent leaves
2. Leaves entire
3. Leaves toothed or lobed
4. Leaves divided

See over for leaf types

Locator Key

411. Flowers with 7 or more regular parts, no apparent leaves at flowering time	1
253. Shrubs with flowers having 4 regular parts, leaves opposite and lobed	2
423. Flowers with 7 or more regular parts, having toothed basal leaves	3
142. Flowers with 3 regular parts, having whorled, entire leaves	4
323. Flowers with 5 regular parts, having basal toothed leaves	5

Coltsfoot Details

Bloom time: March – May.

Yellow flower heads appear before the leaves, on solid, hairy stems. Leaves appear later and are roundly heart-shaped, toothed, and shallowly lobed. This non-native herb prefers damp soil of streamsides, banks and waste places. Observation times:

First bloom: when the first flowers are open in the observed plants.

Mid bloom: when 50% of the flowers are open in the observed plants.

How to use this Key:

Select Flower , Plant and Leaf type.

Group the numbers matching each selection into a three digit sequence, for example Flower type 1, Plant type 4, Leaf type 2 would be 142.

Look up item 142 in the Locator Key to determine the species

Turn to the correct page to see species details and image.


Basal


Entire


Opposite


Toothed


Alternate


Lobed

Whorled


Divided

1. Coltsfoot
(Tussilago farfara)

2. Common Lilac
(Syringa vulgaris)

Lilac Details

Bloom time: May – June. Small fragrant flowers (florets) grow in clusters 10-20 cm long. Heart-shaped leaves are smooth and appear before the flowers bloom.

Observation times:

First bloom: when the first florets are open on the shrub (3 places).

Mid bloom: when 50% of the florets are open on the shrub

Leafing: when the first leaves push out of the bud and unfold completely (3 places).

PlantWatch Pointer If possible, select a lilac bush that has pale to medium purple buds.

Dandelion Details

Bloom time: April – June.

Flower heads are yellow and the flower stem is hollow and leafless. Deeply toothed leaves grow from the base of the plant, appearing before the flowers. Dandelions grow almost anywhere, but are common in cultivated areas and wastelands.

Observation times:

First bloom: when the first flowers are open in the observed plants.

Mid bloom: when the first seed-head opens, forming a white, fluffy ball of seeds.

Trillium Details

Bloom time: April – May. Three distinctive white petals form a single white flower up to 10 cm across, which turns pink as it ages. Three oval leaves on each plant, which taper gradually to a point. Trilliums are found in rich, moist, well-drained woods. Observation times:

First bloom: when the first flowers are open in the observed plants.

Mid bloom: when 50% of the flowers are but have not yet started turning pink.

PlantWatch Pointer If possible, take observations from trail, to avoid trampling growing plants.

Wild Strawberry Details

Bloom time: April – May.

Each plant has three-to-five white five-petaled flowers. Leaves grow from the stem base and are divided into three, deep-toothed leaflets, that appear before the flowers. Found in abandoned fields, along roads and in open woodlands. Observation times:

First bloom: when the first flowers are open in the observed plants.

Mid bloom: when 50% of the flowers are open in the observed plants.

1. Wild Strawberry
(*Fragaria virginiana/vesca*)

1. Trillium
(*Trillium grandiflorum*)

3. Dandelion
(*Taraxacum officinale*)

PlantWatch Observation Form - Ontario

Observer

Name: [Type your first name here]
Address: [Type your street address here]
City/Town: [Type your City or Town name here]
Province: Ontario
Postal Code: [Type your postal code here]
Phone: Type your phone number here (###) ###-#### E-mail: [Type your email address here]

Age: ☐ 5-10 ☐ 11-15 ☐ 16-20 ☐ 21-30 ☐ 31-55 ☐ 56 and over

Plant Observed

Name of Plant: [Type name of plant here]

Flowering Phase

First Bloom: [Type date here (month/day/year)]
Mid Bloom: [Type date here (month/day/year)]

Leafing

Leafing: [Type date here (month/day/year)]

Plant Location (remember to give each location a unique name e.g. schoolyard, backyard)

Location Name: [Type location name here]
Closest City or Town: [Type City or Town name here]
Province: Ontario
Latitude: [Type latitude here deg min sec N]
Longitude: [Type longitude here deg min sec W]
Elevation (if known): [Type elevation here (metres)]

Habitat Type

☐ Deciduous forest
☐ Coniferous forest
☐ Mixed forest
☐ Tundra/barren
☐ Grassland
☐ Marsh, bog, wetland
☐ Farmland
☐ Residential garden/lawn
☐ Schoolyard

Optional Details

Sun exposure: ☐ sunny and open area ☐ in half shade ☐ shaded all day
Plant is located on: ☐ flat area ☐ gentle slope ☐ steep slope
Slope faces: ☐ N ☐ NE ☐ E ☐ SE ☐ S ☐ SW ☐ W ☐ N

Comments

Thank you for participating in PlantWatch

As soon as your observations are complete, mail your data sheet to your regional coordinator or enter your dates on the web at www.plantwatch.ca. By submitting on the web you can cut down on paper and see your dates added instantly to the PlantWatch maps. Remember, every observation counts — reporting even one flowering date for one plant is a great contribution.

Ontario PlantWatch Coordinator
Natalie Iwanycki
Royal Botanical Gardens
680 Plains Road West
Burlington, ON L7T 4H4
ph: (905) 527-1158 ext. 238
fax: (905) 577-0375
niwanycki@rbg.ca

Appendix J: Closing Resources

See next page for Participation Certificate. The Certificate is a fillable Word form. Greyed out areas can be updated with your location's site-specific information. Click on the logo at bottom left to exchange the Conservation Halton logo for your own.

CERTIFICATE OF PARTICIPATION

Type School or Group Name Here

For Taking Action and Making a Positive Contribution to

The Big Picture

... on Biodiversity and Climate Change

Type program date here

Date

Type Interpreter name here (sign above)
Type Education Centre name here (and switch logo below)

CONSERVATION HALTON

BEAN
Biodiversity Education and Awareness Network

Appendix K: Post Program Resources

At the end of the program, interpreters may distribute whichever site specific materials may be appropriate, such as feedback forms, posters, or other handouts.

Sample feedback form:

Group: _____ Date: _____

Program: _____ Staff: _____

Please rate your experience in the following respects.

E = Excellent G = Good S = Satisfactory N = Needs Improvement

1. Age appropriate ____ Hands On ____ Educational ____ Fun! ____

2. What did you enjoy most about this program?

3. What would you change about this program?

Thank you for visiting, come back soon!

These pages include handout material covering biodiversity information and opportunities for action. A section on maintenance needs and observation guides for nesting boxes is included.

Biodiversity: Information and Action Resources

International Links

2010 International Year of Biological Diversity www.cbd.int/2010/welcome/

The United Nations declared 2010 to be the International Year of Biodiversity. It is a celebration of life on earth and of the value of biodiversity for our lives. The world is invited to take action in 2010 to safeguard the variety of life on earth: biodiversity

May 22 International Biodiversity Day www.cbd.int/idb/2010/

The theme for the International Day on Biological Diversity (IDB) in 2010 is Biodiversity, Development and Poverty Alleviation. This year, IDB is part of the International Year of Biodiversity!

International Biodiversity Day 2010 Booklet www.cbd.int/doc/bioday/2010/idb-2010-booklet-en.pdf

Biodiversity conservation and sustainable use with equitable sharing of benefits derived from its natural services are the basis of human well-being.

Convention on Biological Diversity Green Wave greenwave.cbd.int/en/node/4590

During the International Year of Biodiversity (IYB), a host of organizations and individuals around the world, will be taking part in activities to raise understanding and to safeguard the world's biodiversity. The Green Wave is an educational programme that works to increase public understanding of the role that children and youth, citizens, communities and countries have in the conservation and sustainable use of biodiversity - the very life that sustains us all.

Convention on Biological Diversity Youth Page www.cbd.int/youth/

The Secretariat invites children and youth, the leaders of tomorrow, to take action for the protection of life on Earth. Surf with us and learn how!

Gincanino - Convention Youth Newsletter www.cbd.int/doc/newsletters/news-gincanino-2007-12-low-en.pdf

A newsletter on youth and biodiversity by the Secretariat of the Convention on Biological Diversity.

Have you participated in environment and biodiversity-focused youth activities in your country? If so, tell us about your experiences. We'll share the most innovative ones with other Gincaniño readers around the world in our next issue. To contact the Secretariat, visit www.cbd.int/youth or send an email to christine.gibb@cbd.int.

Countdown 2010 – Save Biodiversity www.countdown2010.net/

Countdown 2010 is a network of active partners working together towards the 2010 Biodiversity Target. Each partner commits to specific efforts to tackle the causes of biodiversity loss. The Countdown 2010 Secretariat –facilitates and encourages action, promotes the importance of the 2010 Biodiversity Target and assesses progress towards 2010.

Biodiversity Matters Youth Accord www.biodiversitymatters.org/youth_accord.html

Youth from across the world have drafted a Youth Accord for Biodiversity to be presented to International leaders at the Convention of the Parties, (COP 10), in Japan, October 2010. If you believe that our Youth Accord represents your beliefs on biodiversity please sign on! We are all working for a better world for all species!

National Links

Canadian Biodiversity Information Network 2010 Youth Page
www.cbin.ec.gc.ca/2010/jeunesse-youth.cfm?lang=eng

The Canadian Biodiversity Information Network (CBIN) is currently compiling overviews of diverse Canadian efforts to protect and celebrate biodiversity. We want to hear from you! Is there something special that you do with family, friends, schoolmates, or a youth organization, to help protect biodiversity? Share your story.

PlantWatch New User Registration www.naturewatch.ca/english/observations/newuser.html

Before you submit your observations PlantWatch asks that you register as an observer. You will be asked to enter a 10-digit observer number. This number will allow you to quickly enter your observation information.

Centre for Indigenous Environmental Resources www.cier.ca

We are a national, First Nation-directed environmental non-profit organisation with charitable status. We were established in 1994 by a group of First Nation Chiefs from across Canada. Through our programs, we take action on climate change, build sustainable communities, protect lands and waters, and conserve biodiversity.

Provincial

Biodiversity in Ontario www.mnr.gov.on.ca/en/Business/Biodiversity/index.html

Biodiversity is a scientific word for the incredible variety of life on Earth, from the tiniest insect to a vast northern forest. Biodiversity is about being connected. All species, including humans, depend on each other to survive. Volunteer opportunities exist with many conservation and environmental groups in

communities throughout Ontario. You can contribute to local habitat protection or restoration, help monitor Ontario's biodiversity, or assist in completing specific Ontario Biodiversity Strategy (OBS) Actions.

Biodiversity Education and Awareness Network www.biodiversityeducation.ca/

Once again for 2010, Ontario's Biodiversity Education and Awareness Network is promoting a day of local action based on the theme of Sustainable Development. BEAN would like to profile what various partners and stakeholders are doing, or would like to do, to protect and/or restore biodiversity within this context. It may relate to community development, First Nations, business/industry or renewable resources (agriculture, fisheries, forestry, horticulture). And again, BEAN can assist in covering local event expenses and providing promotional help.

Nesting Box Information

The following information is excerpted from Hinterland Who`s Who (n.d. d).

Cover the nesting box entrance until it's nesting time for the birds you hope to attract. Starlings and sparrows nest early and frequently take over boxes intended for other birds. They are also partly responsible for the decline of many cavity-nesting birds.

Don't put nesting materials inside the box — birds would much rather find their own. But you can help out by making materials available outside.

The box will more likely be used if it's placed on a pole, mounted on a tree-trunk, or suspended from a branch with a hook screwed into the roof.

You can discourage unwanted visitors by putting a guard, such as a tin collar, around the trunk.

Pick a spot that's sunny at least part of the day. Turn the entrance away from the usual direction of wind and rain — birds don't want a storm in their living-room!

If you want to relocate a nesting box, fall is a good time. You may want to add a few new boxes or move old ones to better spots.

Clean your nesting box each fall. That way, you 'II get rid of parasites and leave a spotless house for next spring's family. It's a good idea to wear a face mask (available at hardware stores) to avoid breathing fungi and parasites. Scrub your box with a stiff brush and pour boiling water through it for disinfecting purposes. An alternative is to disinfect the box by spraying the inside with pyrethrum insecticide containing 0.5 percent pyrethrin. This insecticide was originally made from dried chrysanthemums, but is now artificially made. It is very toxic to insects, but will not harm birds. As well, its effects don't last long, which makes it safer for use in nature.

For species like bluebirds, which sometimes nest twice in a summer, remember to houseclean between broods. Removing the first nest keeps adults from building another one on top of it. Otherwise, the new nest could be raised dangerously close to the entrance hole, making chicks easier prey for starlings or raccoons.

Nests left in boxes over the winter will probably attract mice, which love to stuff the cavities with grass and other vegetation. Needless to say, birds are not likely to use such a box in spring.

Check on a regular basis that the structure is in good repair.

See that your box is mounted securely. Be sure the first heavy rain or windstorm won't blow it down. An accident like that could wreck the house and kill nestlings.

If the roof is loose, the bottom warped, or a side cracked, take it down for repairs. If it needs painting or staining, fall is the time to do it. Return the box to its place outside so it can weather all winter. When spring arrives, the smell of the paint or stain will have worn off

GLOSSARY

Adaptation	Adjustment in natural or human systems in response to actual or expected climatic stimuli or their effects, which moderates harm or exploits beneficial opportunities (Ontario's Expert Panel on Climate Change Adaptation, 2009).
Anthropogenic	Resulting from or produced by human beings (IPCC, 2007)
Biodiversity or Biological Diversity	The variability among living organisms from all sources including, *inter alia* (for example), terrestrial, marine and other aquatic *ecosystems* and the ecological complexes of which they are part; this includes diversity within species, between species and of ecosystems (Ontario Ministry of Natural Resources, 2005).
Carrying Capacity	Maximum population of a particular species that a given habitat can support over a given period of time (Miller, 2004)
Climate change	Refers to any change in climate over time whether due to natural variability or as a result of human activity (Ontario's Expert Panel on Climate Change Adaptation, 2009).
Ecosystem diversity	The diversity of *ecosystems* across landscapes.
Genetic diversity	The diversity of genetic makeup of individuals within a single species.
Species diversity	The diversity of species inhabiting *ecosystems*.
Ecosystem	A dynamic complex of plants, animals and microorganisms and their non-living environment interacting as a functional unit. The term ecosystem can describe small scale units, such as a drop of water, as well as large scale units, such as the biosphere (Ontario Ministry of Natural Resources, 2005).
Ecosystem Services	Services that humans derive from ecological functions such as photosynthesis, oxygen production, water purification and so on (Ontario Ministry of Natural Resources, 2005).
Limiting factor	A single factor that limits the growth, abundance, or distribution of the population of a species in an ecosystem (Miller, 2004), or of a biophysical element's continued capability to support its ecosystem (National Energy Board, 2010).
Mitigation	An *anthropogenic* intervention to reduce the human-caused forcing of the climate system; it includes strategies to reduce greenhouse gas sources and emissions and enhancing greenhouse gas sinks (Ontario's Expert Panel on Climate Change Adaptation, 2009).
Resilience	The ability of a social or ecological system to absorb disturbances while retaining the same basic structure and ways of functioning, the capacity for self-organization, and the capacity to adapt to stress and change (Ontario's Expert Panel on Climate Change Adaptation, 2009).
Stewardship	In an environmental context, the concept of responsible caretaking; stewardship is based on the premise that we do not own resources (e.g., wildlife), but are managers of these resources and are responsible to future generations for their condition. (Hinterland Who`s Who, n.d. e).